KEYLEX 800 — MECHANICAL DIGITAL LOCK — INSTALLATION & TEMPLATE

ASSEMBLING THE LOCK

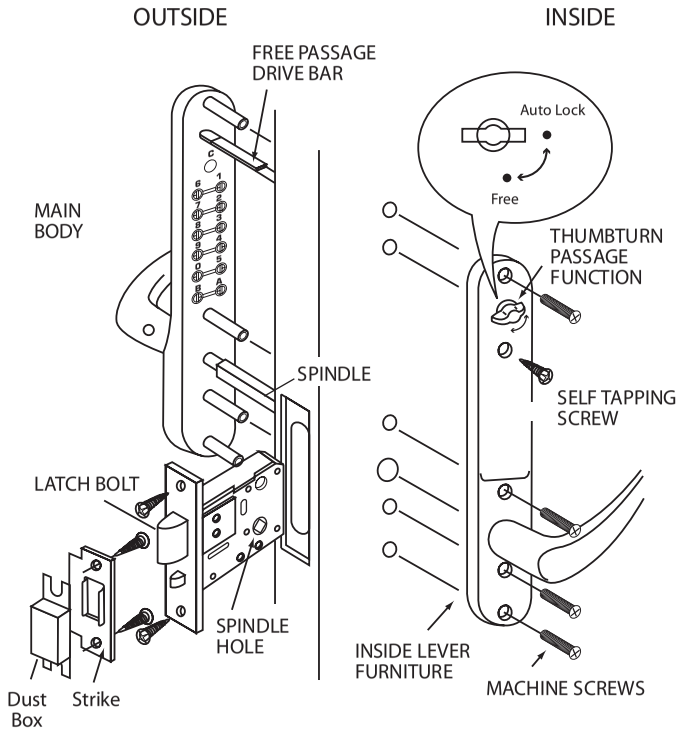

INSTALLATION

1. PREPARE THE DOOR IN ACCORDANCE WITH THE TEMPLATE. ENSURE THAT YOU MAKE THE CORRECT CHOICE OF BACKSET LENGTH. CHECK THIS CAREFULLY AGAINST THE LATCH PROVIDED. 60MM IS STANDARD.
2. INSTALL THE LATCH BOLT AND STRIKE PRIOR TO INSTALLING THE MAIN LOCK BODY.
3. MOUNT OUTSIDE LOCK BODY AS SHOWN AT EACH OF THE FOUR POINTS PLUS THE SELF-TAPPER.
4. REFER TO THE SECTION BELOW FOR CODE SETUP. ENSURE THAT THE CODE IS TESTED AND THAT THE LOCK WORKS SATISFACTORILY BEFORE ALLOWING THE DOOR TO CLOSE.
5. PLEASE REFER TO THE SECTION BELOW FOR AN EXPLANATION OF THE PASSAGE FUNCTION OPERATION.

HANDING THE LEVER

SETTING UP THE LOCK

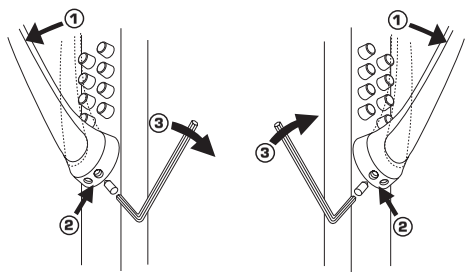

ROTATE THE QUADRANT SPINDLE CLOCKWISE OR ANTI-CLOCKWISE TO SET THE REQUIRED HAND

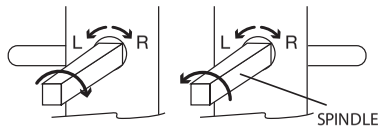

1. TO RELEASE THE LEVER FROM THE UPRIGHT POSITION, GRIP THE LOCK BODY FIRMLY IN ONE HAND AND THE LEVER FIRMLY IN THE OTHER. MOVE THE LEVER THROUGH 90 DEGREES TO EITHER THREE O'CLOCK OR NINE O'CLOCK (AS REQUIRED). YOU WILL FEEL INITIALLY A STRONG DEGREE OF RESISTANCE DURING THIS PROCEDURE. THIS IS ONLY THE CLUTCH MECHANISM 'KICKING-IN'. DO NOT WORRY; YOU WILL NOT DAMAGE THE LOCK.
2. LIFT THE LEVER THROUGH 45 DEGREES UNTIL THE LEVER SHAFT HOLE LINES UP WITH THE HOLE IN THE LEVER.
3. SET THE LEVER BY TIGHTENING THE GRUB SCREW WITH THE ALLEN KEY (BOTH SUPPLIED IN THE HARDWARE PACK). ALLOW THE LEVER TO RETURN TO THE HORIZONTAL POSITION.

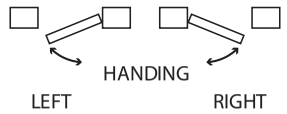

LOCK OPERATION & FUNCTION DESCRIPTION

Clearing Codes
It is essential that any 'spurious' code be cleared before operation of the lock from the outside. The 'C' clear button should be pressed as a precursor to the entry of your code.

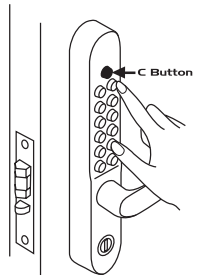

Entering Codes
Codes should be ideally selected to contain between 3 and 6 digits and can include a mixture of letters and numerals. Buttons may be pressed in any order and must be pushed firmly to engage the code. Once the correct code is entered the lock may be used. If mistakes are made you may clear the code using the procedure described above.

Changing Codes
Code changing is fast and straightforward requiring only a slotted screwdriver once the lock body is removed from the door. Each button is marked with a single line at right angles to the screwdriver slot with corresponding marks adjacent on the back plate. Rotate the button to align the two marks thus setting that button as part of the code.

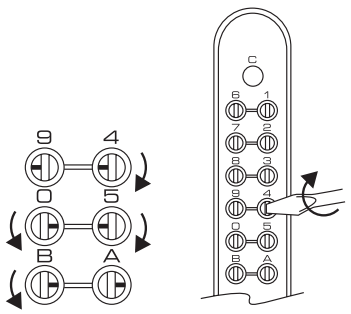

Setting the Passage Function
Keylex locks do not include a 'hold-back' facility. However, the passage function facility achieves the same end result. The door is opened using the correct code and (while the door is ajar) the passage function snib is set to 'free passage'. The lock is then free from either side until such time as the passage function snib is re-set.

NOTE - only authorised code holders can set the passage function feature. It is possible to modify the feature to include a removable key to restrict the feature to 'key holders' only.

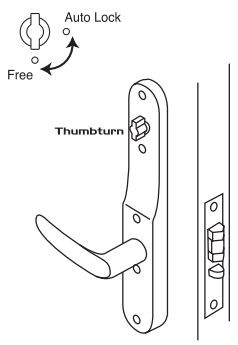

(Optional) Key Override
The key override cylinder is located at the base of the lock body and provides an override to the code for any key holder. This facility is convenient to building owners or premises managers who may have a number of locks, each with different user codes, to manage.

Cylinders can be provided keyed alike, to differ or under a mastered suite. Each cylinder is supplied with a minimum of two keys.

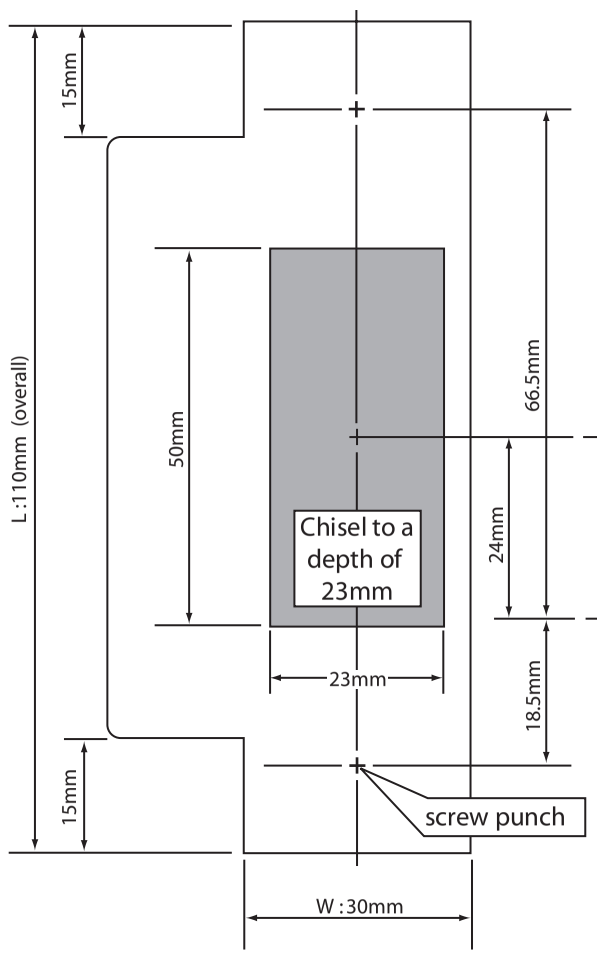

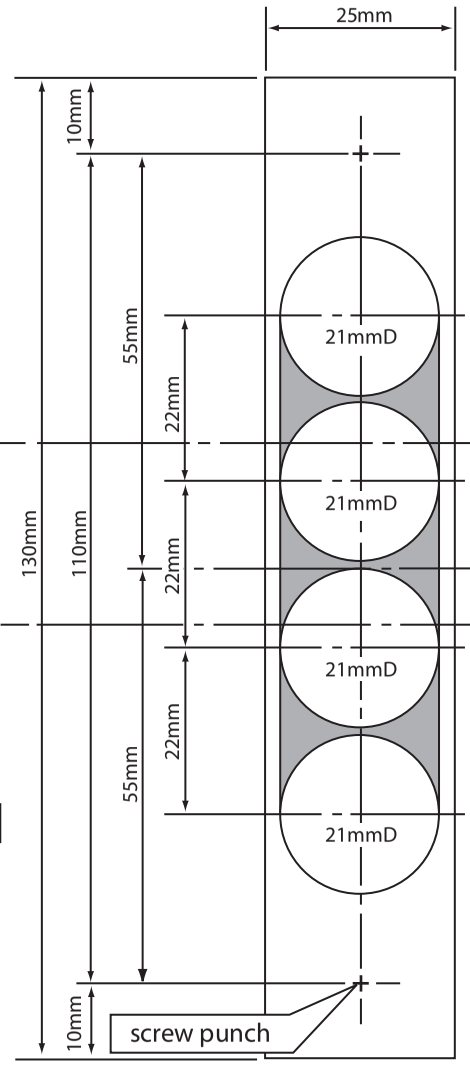

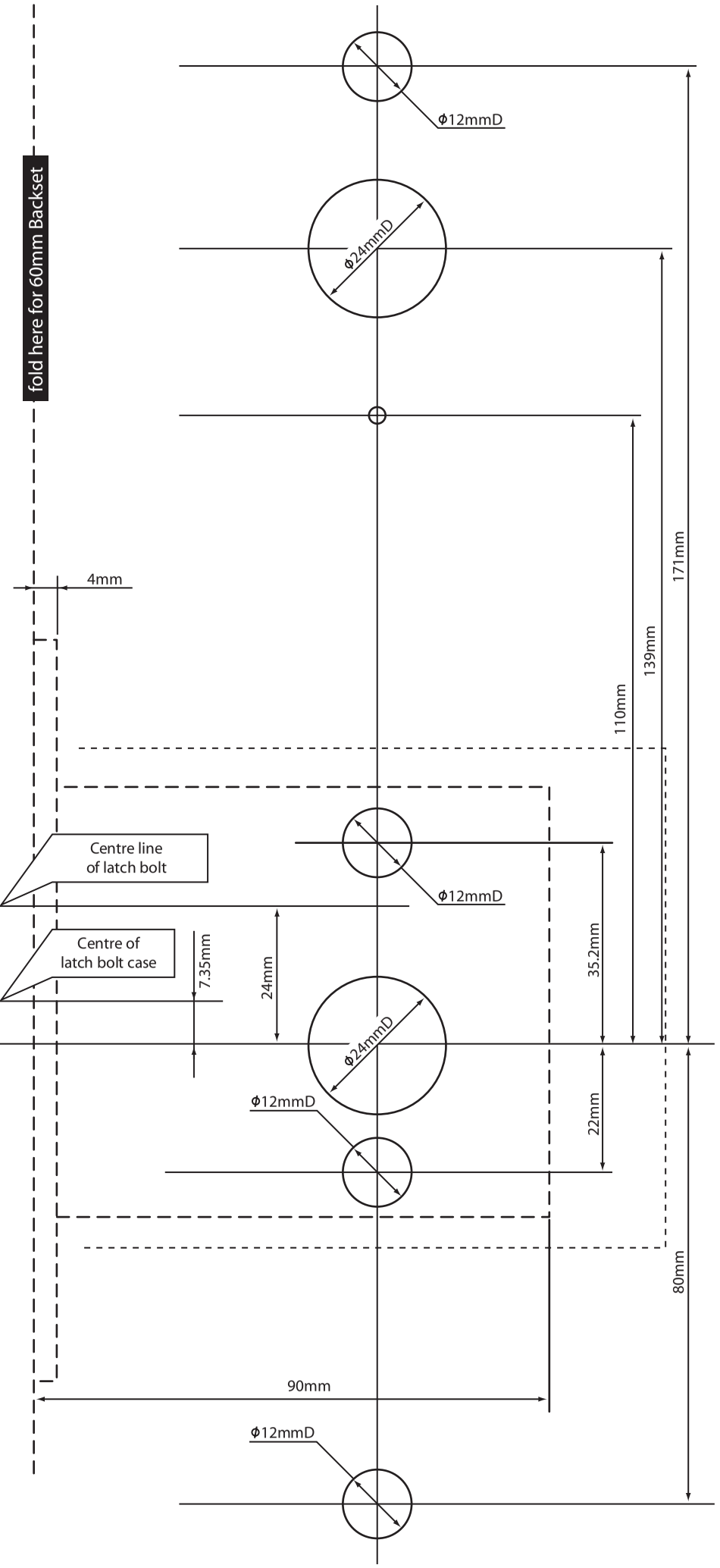

Relcross
Door, Security and Washroom Hardware

Relcross Ltd.,
Hambleton Avenue,
Devizes, Wiltshire
SN10 2RT United Kingdom

Tel: 01380 729600
Fax: 01380 729888
Email: sales@relcross.co.uk
Internet: www.relcross.co.uk